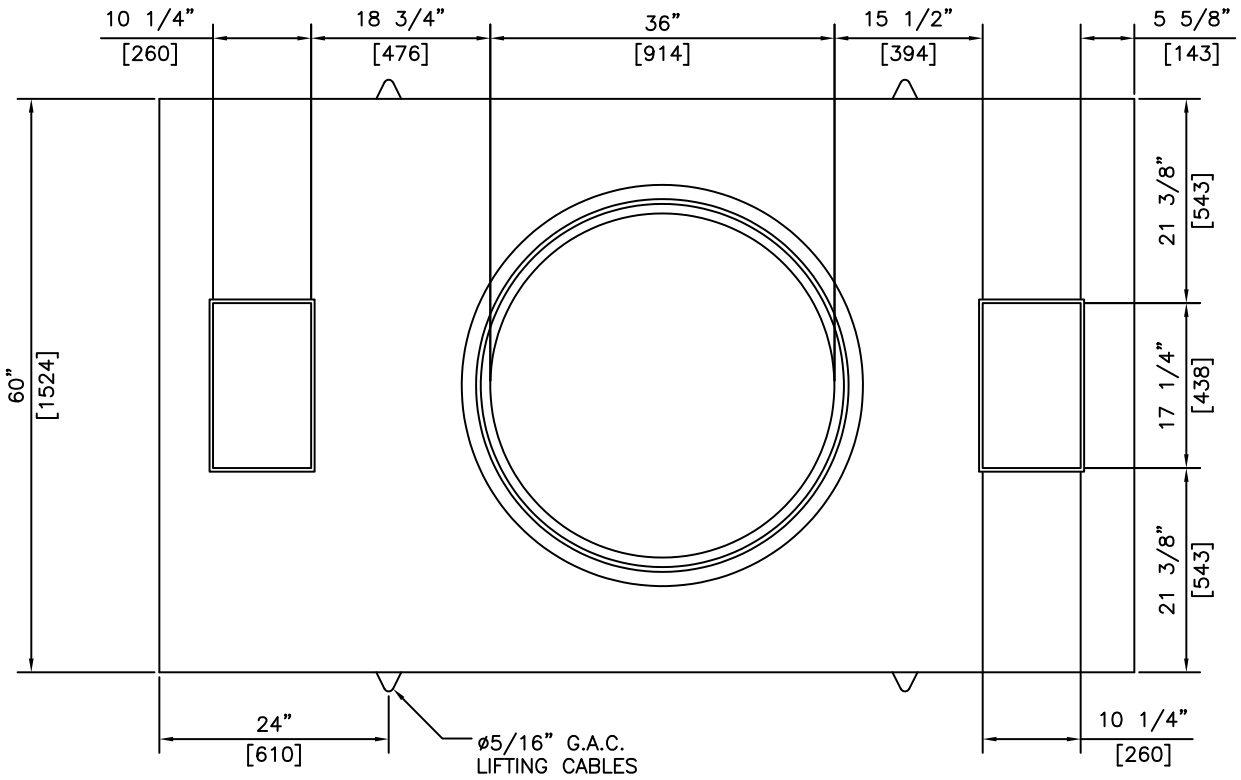

PLAN VIEW

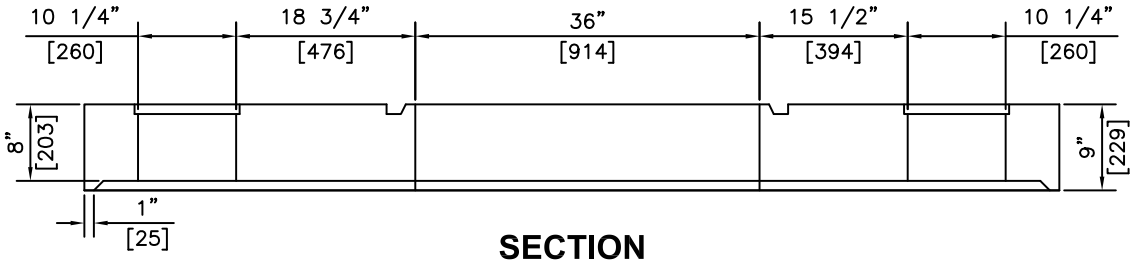

SECTION

NOTES:
US PATENT No 6,079,571
CANADIAN PATENT No2,252,307

REVISED: FEB 1 2006

A.F.C. AMERICAN FORCECRETE OF CANADA Inc.	3891 Irvine Road LAKE COUNTRY, B.C. V4V 2G4 PH: (250) 548-0056 FX: (250) 765 0820	BY: PKR	**MODEL 1601/1601E OIL/WATER SEPARATOR LID**	ITEM NO.
		DATE: FEB 1 06		**1603**
		SCALE: NTS		